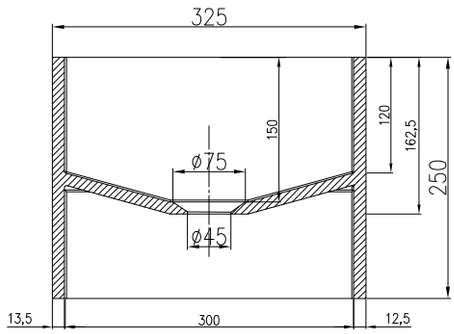

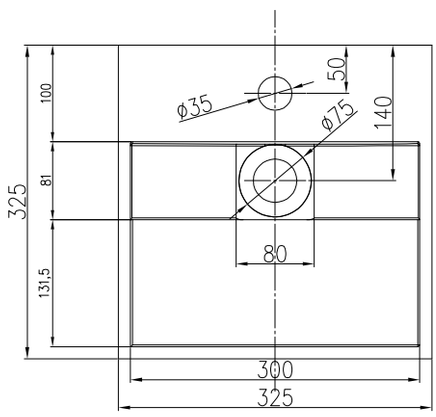

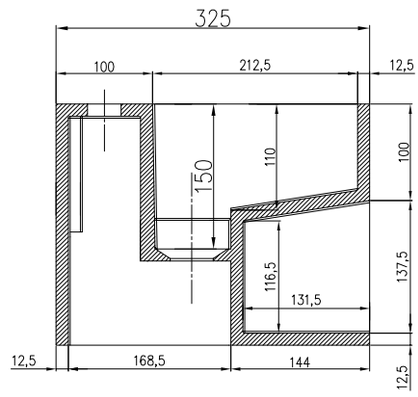

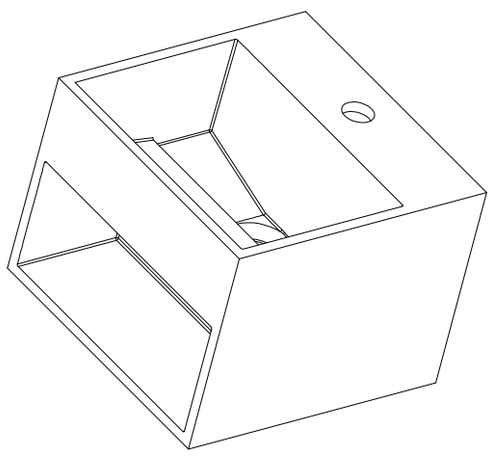

	>0-6	>6-30	>30-120	>120						
	±0.2	±0.5	±0.8	±1.2		PB2035				